BAUDER
making roofs secure.

Hot Melt Structural Waterproofing

Flat roof, podium, and plaza solutions

Photo Credit: University of Central Lancashire

Marischal Square
New Aberdeen

BUILDING BOARD

Roof Size:	5,400m²
Waterproofing:	Bauder Hot Melt System
Architect:	Muse Development & Morgan Sindall
Approved Contractor:	Briggs Amasco

Bauder is a leading European manufacturer of flat roof waterproofing membranes and insulation to make buildings watertight and thermally efficient; photovoltaic systems for renewable energy generation; green roofs to support the environment and create better living and working spaces for people; and blue roofs for stormwater attenuation and prevention of localised flooding.

Customers choose us because of the way in which we do business, for our robust advice on the right system, and our approach to delivering projects. We work alongside clients to deliver the best solution for a building from our broad portfolio of systems.

Hot Melt Structural Waterproofing System

Monolithic, fully bonded installation for cold or inverted constructions

Robust and flexible hot applied polymer modified bitumen waterproofing applied in two layers with a polyester reinforcement. Safe2Torch guidance is followed for detail design where combustible materials are located. The system is intended to last the design life of a building when fully protected or buried.

Specifying a hot melt system

Hot melt structural waterproofing is particularly advantageous for protected, inverted, or buried roofs such as biosolar roofs, blue roofs, green roofs, paved, terraces, podiums, plazas, and car parks.

Cost effective as a waterproofing system where the specifier may expect no future replacement costs, once installed its anticipated durability will match the expected life of the building.

Precise test standards and results are stated in Bauder technical data sheets and using our specification service will confirm suitability to each project.

Outline of our hot melt system

- The solution is primarily for new build projects.
- Range of insulations for inverted roof construction, including non-combustible options.
- Online system and product evidence with up-to-date technical statistics, DoCs and DoPs, testing outcomes, certification, approvals, accreditations, and conformity assessment.
- Accessories, rooflights, and outlets complete the roof.
- Comprehensive range of guarantee packages to suit project and cover requirements.

Rooftops with an environmental focus

- Green roof systems.
- Blue roof SuDs solutions.
- Biosolar PV array.

Verified properties

BBA Certificate 06/4350 stated:

- Fire testing to BROOF(t4) for external fire exposure on defined permutations of product build up.
- Suitable for zero falls (no back falls) on the structure.
- Durability stated: Under normal service conditions, the system will provide a durable waterproofing for the service life of the structure in which it is incorporated.

Credit: University of Central Lancashire

University of Central Lancashire
Preston

EPD Certification:

- Bitumen membranes
- BauderROCK
- BauderGLAS

Bauder Hot Melt System
Configuration examples

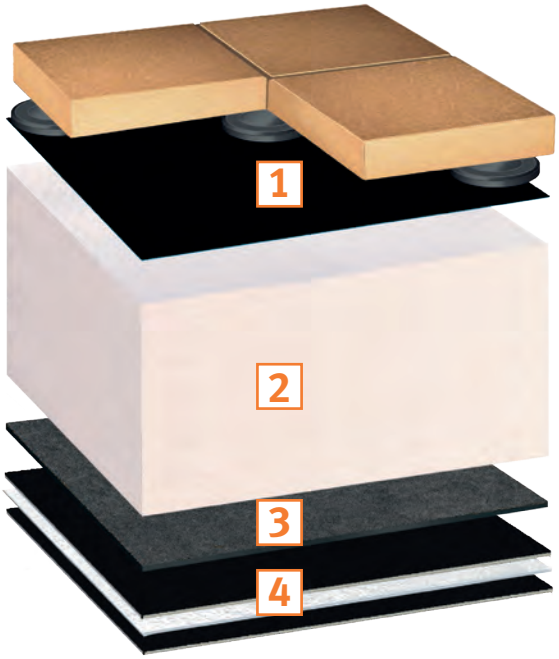

BauderJFRI PREMIUM+ with hard landscaping

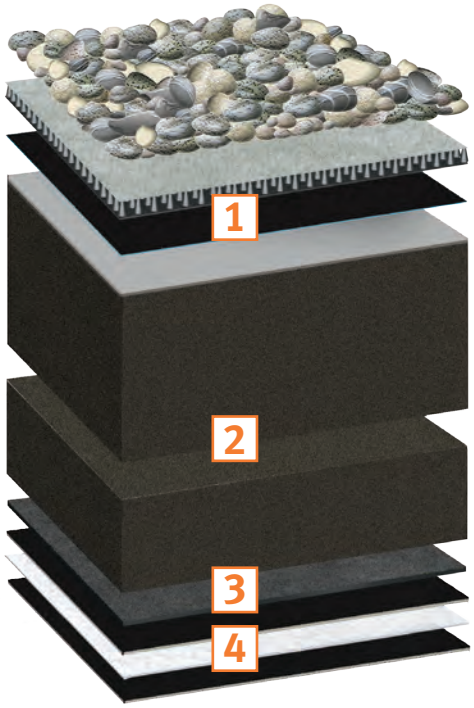

BauderGLAS with pebble ballast

SYSTEM DATA (download product data sheets for more information bauder.co.uk/technical-centre)	
1 **Water flow reducing layer**	**BauderJFRI WFRL** Flexible sheet of polypropylene strands randomly spun-bonded together. **BauderXPS WFRL** High performance non-woven polyethylene membrane that is UV resistant.
2 **Inverted insulation options** Range of thicknesses to meet thermal efficiency requirement.	**BauderJFRI PREMIUM + / 300** (expanded polystyrene). **BauderXPS 300** (extruded polystyrene). **BauderGLAS Inverted** (cellular glass).
3 **Access protection**	**Bauder AP1** 1.5mm bitumen access protection membrane. **BauderPLANT E 42** FLL approved root resistant 4.2mm elastomeric bitumen membrane. **Bauder AP3** 3 or 6mm prefabricated protection boards.
4 **Structural waterproofing layers**	**Bauder Bakor 790-11 hot melt** (rubberised bitumen asphalt). **Bauder Polyester Reinforcement Sheet** **Bauder Bakor 790-11 hot melt** (rubberised bitumen asphalt).

This document is uncontrolled if printed or stored, always confirm you have the latest version available from our website: bauder.co.uk/technical-centre

Bauder Hot Melt System

Project gallery

Three Crown Square
Galway

City Park 1
Aberdeen

Holyrood Student Accommodation
Edinburgh

Greenbank Student Village
University of Liverpool

Green Roofs

Living roofs create environmentally focused buildings and recreational spaces for people to enjoy

A Bauder green roof brings together the finished planting scheme and all its supportive components atop the waterproofing for intensive, extensive, and biodiverse systems.

There is a huge scope for the design of soft landscaping for a green roof and an integrated approach is crucial for the success of the completed roof. We will work with you from the earliest design stage to ensure that your green roof project comes to fruition beautifully.

Intensive green roofs

Publicly accessed rooftops and podiums where the combinations of finishes will impact the design, construction, drainage, and substrate depths to support the vegetation's requirements.

Finish options:

- Lawns • Flowerbeds • Vegetable allotments
- Shrubs • Trees • Water features • Playground spaces
- Sports facilities • Access hard landscaping

Extensive green roofs

Systems with low-maintenance and self-sustaining plant species requiring an appropriate depth of substrate to support vegetation.

Finish options:

- Plug plants • Mature vegetation blankets
- Seed mixes

Biodiverse roofs

Specific vegetation and natural habitats created to replicate, as far as practical, the ecological requirements for the local area. The natural habitats created are designed to support a variety of plants, birds, animals, and invertebrates. The careful design and construction of these habitats is key to conforming to the local Biodiversity Action Plan (BAP).

Finish options:

- Native species plug plants, seed mixes, and vegetation blanket • Log piles • Insect hotels • Dew ponds

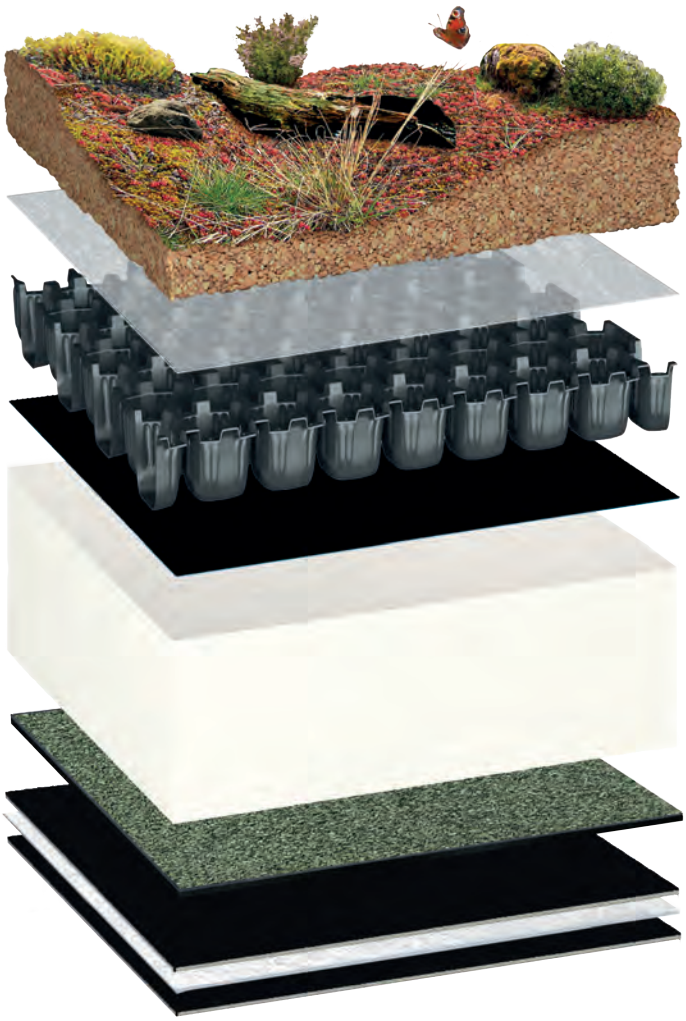

Hard Landscaping Finishes

Creating courtyards, podiums, and vehicular access

Hard landscaping construction can impact on the design of your building project and can embrace factors such as road ways for cars and emergency vehicles, paving and paths, and where keeping the total build-up height of the system, together with providing a completely flat paved surface is important in helping to reduce construction costs.

Bedded paving

Creating low maintenance accessible areas such as walkways, access roads and terrace spaces with container planting set atop the paving or decking.

Pedestal supported

There are three flexible solutions designed for open-jointed free-draining paving or decking finishes above the waterproofing.

Bauder adjustable pedestals

A simple, high strength (1,000kg/m^2), low-cost pedestal. The units are fully adjustable with optional slope correctors and a comprehensive range of accessories.

Bauder slope correcting pedestals

Fully adjustable pedestal range with integral slope corrector. The pedestals have a very high compressive strength. The edging and spacing options solve a variety of paving, decking and grillage solutions.

Bauder non-combustible pedestals

For some applications, particularly balconies, a non-combustible pedestal is required. Bauder's NC range offers an aluminum pedestal designed for use on roofs and balconies, with a broad base to spread the load of the system.

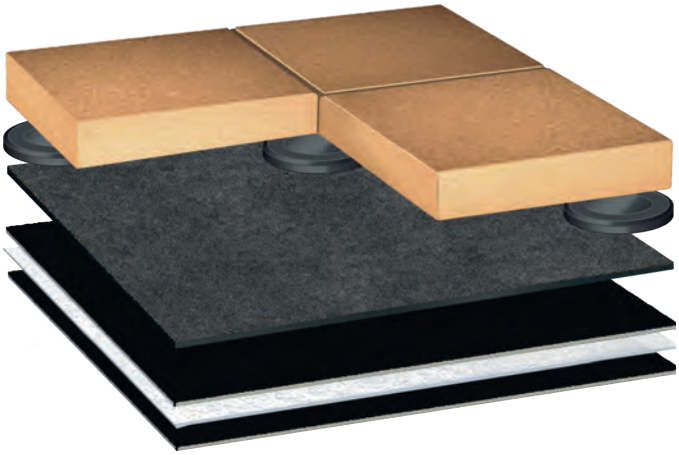

Bauder Pedestals

University of Leicester

Blue Roofs

Rooftop or podium level sustainable urban drainage solutions (SuDS) with a variety of landscape finishes

Three systems for attenuating different levels of stormwater for urban areas to meet the run-off limitations of the development site.

A BauderBLUE roof system can be constructed with a variety of landscape finishes including green roofs, biosolar PV array, or hard landscaping such as promenade tiles. There are different options available depending on the desired finish and the volume of water to be attenuated.

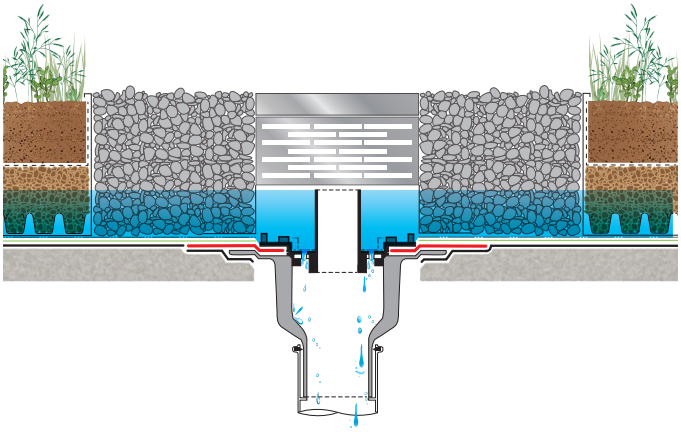

BauderBLUE STORMsub System

This hybrid system utilises the water storage capacity of a green roof build up. The additional SUB-RE UK layer and RE 40 drainage and attenuation board act with the flow restrictor to carefully control water discharge off the roof.

Finish options:

- Extensive and biodiverse vegetation

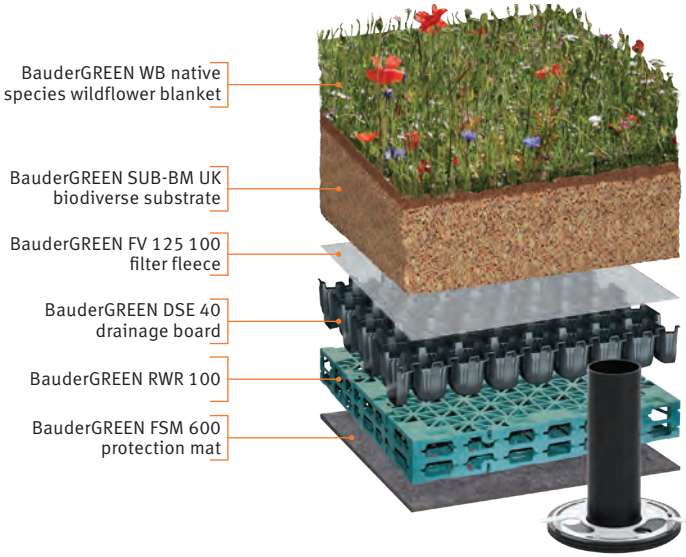

BauderBLUE STORMcell System

This high-volume system creates a void space between the waterproofing and the surface finish. The STORMcell system gives the greatest capacity for water storage, holding up to 28 litres/m$^{2.}$

Finish options:

- Extensive, biodiverse, and semi-intensive green roofs
- BioSOLAR G LIGHT • Paving • Stone ballast

BauderBLUE STORMvoid System

This simple system creates a void space with Bauder pedestals and paving finish to allow water movement to the flow restrictor outlet. Utilising Bauder pedestals ensures the entire system is covered by our guarantee.

Finish options:

- Paving • Metal decking

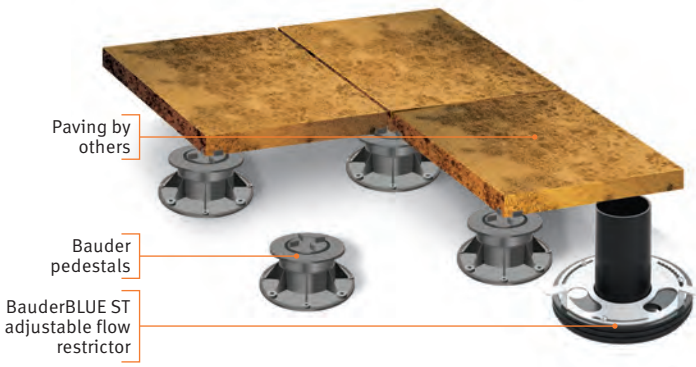

Plus points

- Our specification service will confirm suitability of waterproofing system and type of blue roof for each roof area.
- Technical calculations for required discharge rate of the blue roof and its geographical location.

Biosolar Roofs

BauderSOLAR G LIGHT combines a solar PV array with a green or blue roof to bring net zero solutions into focus

BauderSOLAR G LIGHT is an integrated solution for mounting photovoltaic renewable energy on a green or blue roof where the substrate and vegetation provide ballast to secure the array.

About the system

The BauderSOLAR G LIGHT system allows for the entire roof area to qualify as a green roof. The vegetation can focus on biodiversity and use a seed mix of native species plants for further BREEAM credit rating.

The vegetation assists in maximising solar energy generation as the green roof preserves ambient rooftop temperatures helping to keep the modules at optimal output.

Plus points

- Single source for integrated design and guarantee.
- Responsibility for the waterproofing and solar PV installation.
- Maximises the roof area as entire space can qualify as a green roof.
- Comprehensive range of guarantee packages to suit project and cover requirements.

More information on specifying the right solution is available in our solar PV brochure or via our website bauder.co.uk/biosolar

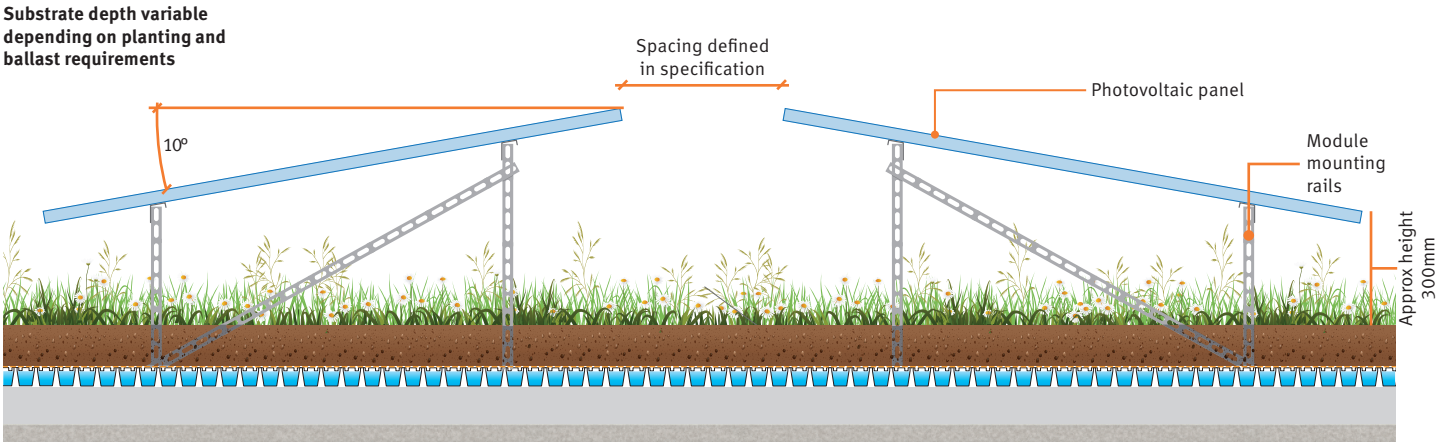

Bauder Insulations

Creating energy efficient podiums and flat roofs

Effectively insulating a roof improves the energy efficiency of the building which has positive effects on the environment. The Bauder range of inverted insulants ensures the right outcome is specified for the building.

BauderJFRI I
High performance, lightweight, rigid expanded polystyrene (EPS) insulation that is resistant to the passage of water.
- BauderJFRI PREMIUM+
- BauderJFRI PREMIUM 300

BauderXPS 300 I IU
CO_2 blown extruded polystyrene insulation with high compressive strength and low water absorption.

BauderGLAS Inverted I IU N
Non-combustible unfaced cellular glass insulation that gives high compressive performance and achieves Euroclass A1 rating. Faced insulation achieves Euroclass E rating.

Water Flow Reducing Layers
These membranes are separator sheets that reduce the water flow between and below the insulation to reduce the cooling effect of rainwater and therefore improve the thermal performance of the insulation.
- BauderJFRI WFRL for JFRI and GLAS insulants
- BauderXPS WFRL for XPS insulants

More information on specifying the correct insulation for your project is available via our website bauder.co.uk/insulation

Key:
I = inverted roof
IU = inverted upstand
N = non-combustible

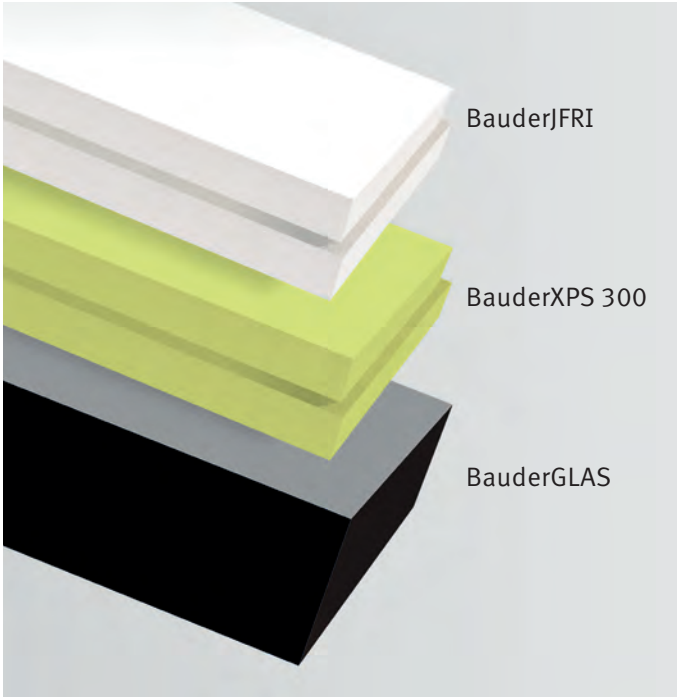

Rooflights, Insulated Outlets, and Accessories

Completing the roof package

Our range of accessory and ancillary products offer a comprehensive selection to complete the system and ensure compatibility across the entire roof.

Your dedicated technical manager will assist you in selecting the right items for your individual project.

Rooflights

Ranging from modular units to specialist structural glazing we can fully advise and guide you in the selection of suitable rooflights.

- Manufactured to comply with current Building Regulations and Health & Safety requirements.
- Fully compatible with our waterproofing systems.
- Ventilation options.
- Comprehensive guarantee.

Rainwater outlets

Our insulated outlets offer thermal continuity at drainage points and the BRE certified high thermal value of the rigid foam body prevents condensation from forming on the underside of the outlet body.

Our range of outlets covers flat roofs, green roofs, blue roofs, vertical gravity flow, parapets with a through chute to an external hopper, and tell-tale overflow.

- Robust, durable, shock and impact-proof.
- High capacity and low noise drainage.
- Included within our waterproofing guarantees.

Accessories, ancillaries, and attachments

Our range covers all the other items for the installation or finish of a roof and includes:

- Termination bars & trims
- Sealants
- Adhesives
- Primers

Holyrood Student Accommodation
Edinburgh

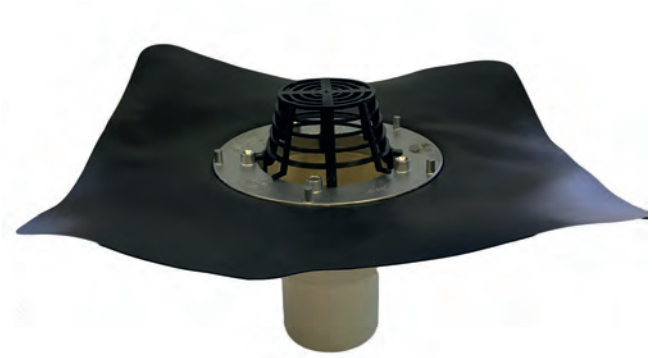

Hot Melt Outlet

Our Service

It's all about the right specification, supportive technical advice, and installation quality

Delivering modern flat roof solutions from a single-source point to ensure every Bauder roof is designed cohesively to meet the project needs and reduce risk.

Our service to you

We assist you with the design of the detailing, writing the specification for the flat roof solution, and recommend suitable approved contractors to tender for the project. The service is without charge, and we work with you to ensure your roof specification meets all your needs and that of the building. Our area technical managers play a vital role in the success of every project and will work closely with you to develop the most appropriate, budget aware, and practical solution.

Our installations

Bauder approved contractors deliver the installations of our roofing systems and receive the support and expert advice they need to ensure a high-quality roof solution.

Once your roofing works commence, our experienced team of site technicians monitor and inspect the workmanship to ensure our standards are fulfilled.

Our guarantee packages

Bauder offers a range of guarantees depending upon the roofing system chosen and the project requirements. Sample guarantees are available upon request and are written in plain and easily understood language, clearly stating what is included, excluded and required to comply with the guarantee terms.

Guarantee cover options

- The guarantees are backed by a European manufacturer of flat roofing systems with a turnover of more than €1 billion.
- Bauder guarantees are available for differing durations, ranging from 10 to 25 years (for some systems this is 30 years).
- Bauder guarantees offer various levels of cover and can include.
  - Materials supplied by Bauder.
  - Specifications, design and advice provided by Bauder.
  - Workmanship of the Bauder Approved Installer

For sample guarantees outlining cover level and full terms and conditions please contact technical@bauder.co.uk.

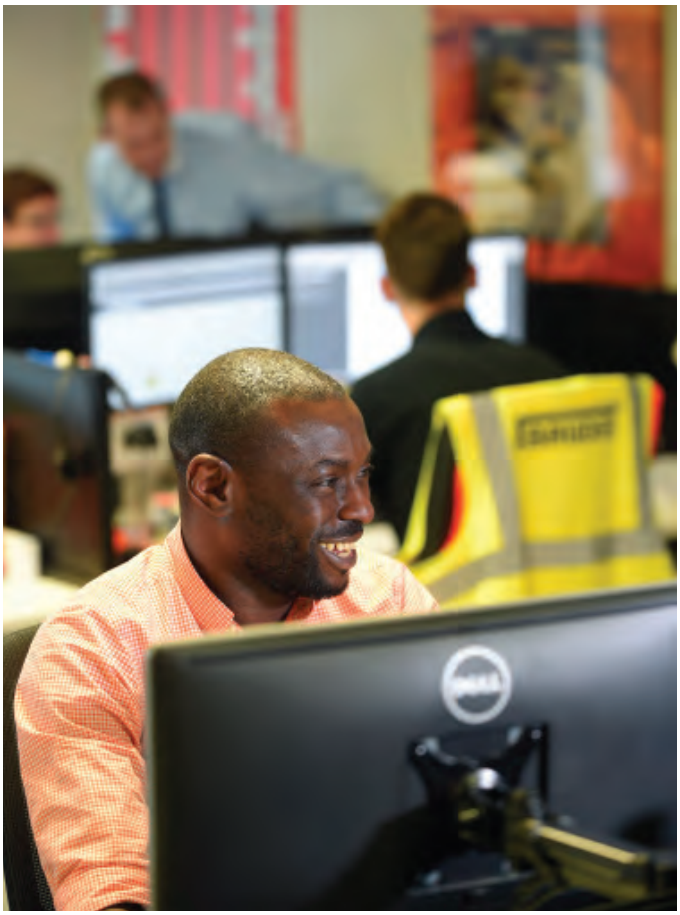

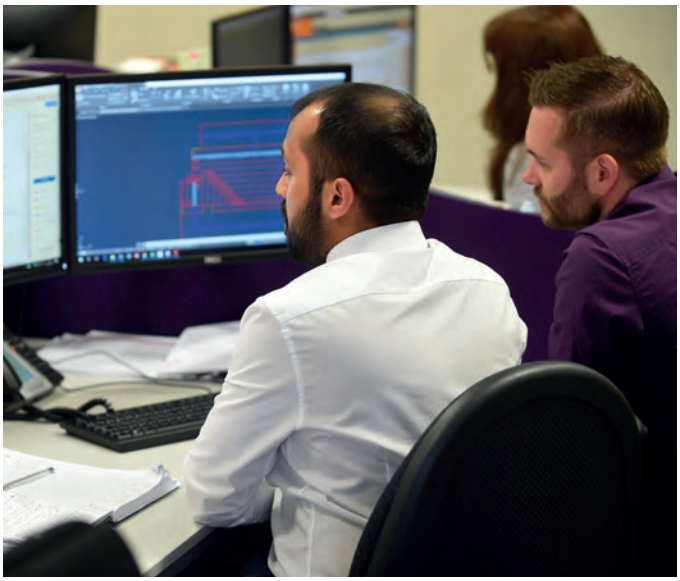

Project Studies

Benson House, Leeds

Synopsis

Award winning refurbishment project that transformed the existing podium car park into a landscaped deck with a new scheme to compliment the updated entrance.

The existing slab had backfalls and was levelled with hot melt before the full system was installed. The existing planters and upstand details were overlayed, the outlets replaced, and the roof area fully sealed.

System summary

Waterproofing	Bauder Hot Melt
Green Roof	Bauder intensive green roof with turf finish

Highlights

- City centre project with access restrictions.
- Waterproofing tested throughout installation as access to the rest of the site for other trades was through the main working ground.
- Full Bauder technical support.

BUILDING BOARD	
Roof Size:	1,500m²
Specifier:	DLG Architects
Approved Contractor:	Protech Roofing Ltd

Marischal Square, New Aberdeen

Synopsis

Marischal square is an award-winning complex that transformed the centre of Aberdeen. Redevelopment of the site is now offices, restaurants, cafes, retail outlets, a hotel, and open courtyard public space. The clients sought a single source supplier for project continuity and guarantee for the podium, roofs, and terrace areas.

System summary

Waterproofing	Bauder Hot Melt
Green Roof	Bauder intensive green roof with hard landscaping, planted beds, and turf finish

Highlights

- Single source guarantee for all roof areas.
- Accessible terraces with significant foot traffic.
- Full Bauder technical and onsite support.

BUILDING BOARD	
Roof Size:	5,400m²
Client:	Muse Development & Morgan Sindall
Approved Contractor:	Briggs Amasco

Project Study

The Catalyst, National Innovation Centre, Newcastle

Synopsis

Innovation centre constructed in the heart of Newcastle for bespoke, flexible facilities to promote innovation, engage with local and national businesses, and support the development of new technology and innovations in the fields of ageing sciences and data.

The client's objective was for an integrated PV system that didn't compromise the integrity of the green roof solution being installed. Bauder designed and supplied a 30.78kWp system, generating an estimated 26,140kWh per annum. The innovative BauderSOLAR G LIGHT system is manufactured to ensure the performance of both the green roof and solar PV systems are maximised, taking into consideration the need for access and maintenance.

Advocacy

Andrew Connell, Project Manager at Energize Electrical Services Ltd:

"Working with Bauder makes life so much easier because we can really tap into their expertise.

The Bauder Biosolar PV system is a straightforward and quick system to install, incorporate that with excellent Bauder support team made the installation a dream to work on, and most importantly it looks great."

Systems summary

Waterproofing	Bauder Hot Melt
Solar PV	BauderSOLAR G LIGHT
Green Roof	BauderGREEN WB native wildflower blanket

Highlights

- BREEAM Outstanding.
- Integrated roof solution.
- Tight works programme and delivery schedules.
- Full Bauder technical support.

This document is uncontrolled if printed or stored, always confirm you have the latest version available from our website: bauder.co.uk/technical-centre

The Catalyst, National Innovation Centre Newcastle

BUILDING BOARD	
Roof Size:	1,500m²
Waterproofing:	Bauder Hot Melt System
Architect:	GSS Architecture
Approved Contractor:	Chemplas Ltd
PV Installer:	Energize Electrical Services Ltd

BAUDER
making roofs secure.

UNITED KINGDOM
Bauder Limited
70 Landseer Road, Ipswich, Suffolk
IP3 0DH, England
T: +44 (0)1473 257671
E: info@bauder.co.uk
bauder.co.uk

IRELAND
Bauder Limited
O'Duffy Centre, Carrickmacross,
Co. Monaghan, Ireland
T: +353 (0)42 9692 333
E: info@bauder.ie
bauder.ie

Respecting the planet

Reducing use of materials

This literature is only available as a digital brochure to reduce the use of paper. If you need to print it, please recycle at the end of purposeful use.